THIS DRAWING / DESIGN IS STRICTLY CONFIDENTIAL & THE COPYRIGHT THEREIN THE EXCLUSIVE PROPERTY OF
MOBILE CLIMATE CONTROL INC.
AND MAY NOT BE USED OR COPIED OR EXHIBITED WITHOUT THEIR WRITTEN PERMISSION.

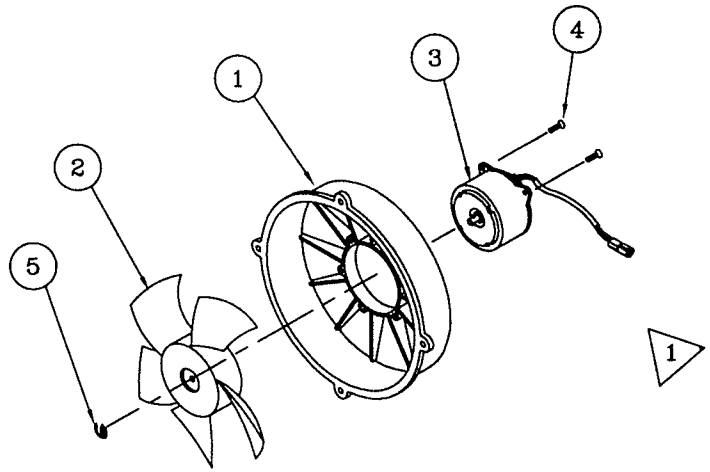

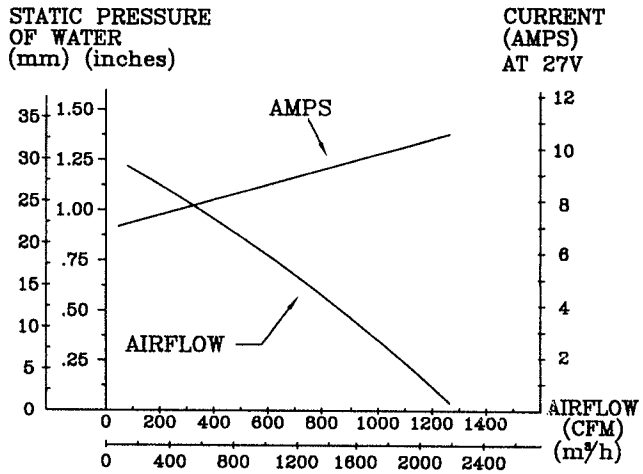

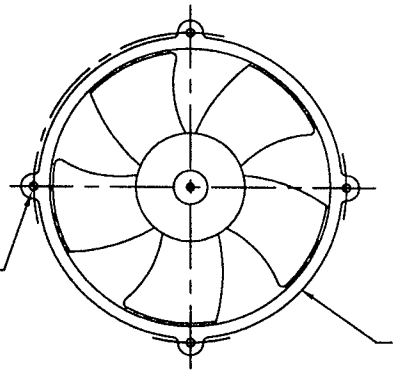

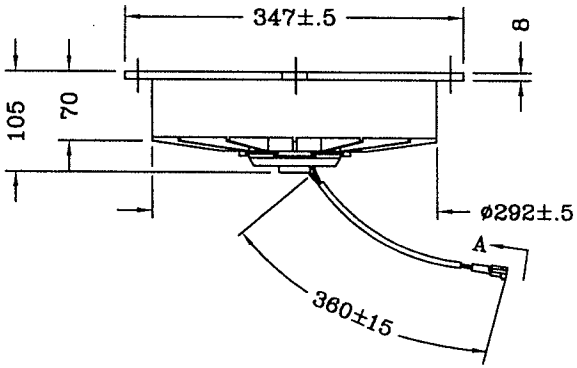

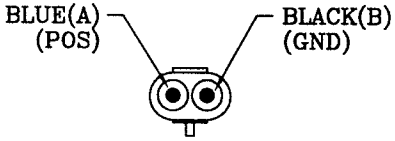

VIEW A

NOTE:

VENTURE MADE OF 30% GLASS FILLED POLYPROPYLENE AND PAN MADE OF 30% GLASS FILLED NYLON

SPRAY THE CENTRE OF BLOWER WHEEL WITH ANTI-RUST.

ELECTRICAL CONNECTIONS:

2-WAY MALE WEATHER PACK CONNECTOR, PACKARD #12010973 (MCC #31-1068) WITH MALE TERMINAL #12124582-L (2X) (MCC #31-1039) AND SEAL #12010293 (2X) (MCC #31-1024)

SYM	PCS	PART NO.	DESCRIPTION
5	1	29-0167	"C" CLIP
4	3	29-0166	#10-32 HEX. SOCKET CTR. SUNK
3	1	25-0592	MOTOR 24V
2	1	25-0579	FAN
1	1	25-0577	VENTURI

CHECK BY: WJ DATE: 6/29/04

SYM	DESCRIPTION	DATE	BY
1	REVISED AS PER ECN #4227	JUNE 29,04	MS

REVISION

TOLERANCE UNLESS OTHERWISE SPECIFIED

ANG.	0.5/5	3/6	6/30	30/120	120/315	315/1000	1000/2000	OVER 2000
±1°	±0.15	±0.2	±0.5	±0.5	±1.2	±2	±3	±4

THIS PRINT IS PROVIDED ON A RESTRICTED BASIS AND IS NOT TO BE USED IN ANY WAY DETRIMENTAL TO THE INTEREST OF MOBILE CLIMATE CONTROL INC.

METRIC

Mobile Climate Control Inc.
Toronto – Ontario – Canada

15-7502
FAN ASSY. 24V

SCALE: NTS BY: GR
DATE: SEPT 29, 1996
DWG: P3-3993 REV: 1