THIS DRAWING / DESIGN IS STRICTLY CONFIDENTIAL & THE COPYRIGHT THEREIN THE EXCLUSIVE PROPERTY OF
MOBILE CLIMATE CONTROL INC.
AND MAY NOT BE USED OR COPIED OR EXHIBITED WITHOUT THEIR WRITTEN PERMISSION.

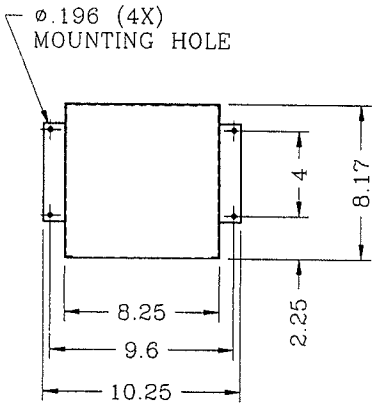

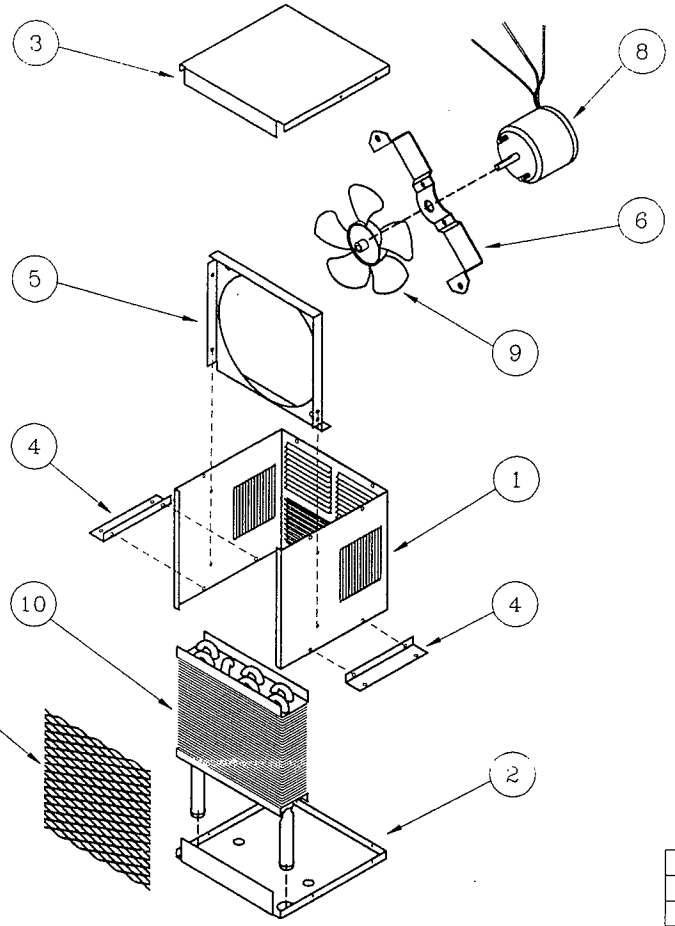

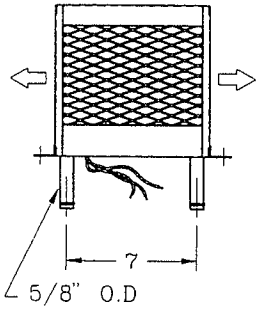

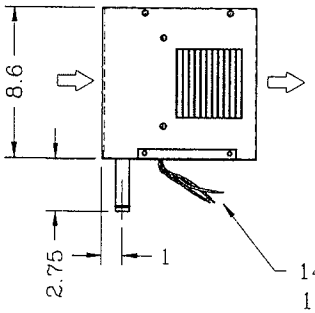

14GA ELEC. LEADS
16" LONG

SPECIFICATION:

HEATING	-21000 Btu/h
AIR FLOW	-265 CFM
CURRENT DRAW	-5.8 Amps/12V
WEIGHT	-9lbs.

SYM	PCS	PART NO.	DESCRIPTION
10	1	22-0033	HEATER COIL
9	1	25-0023	FAN
8	1	25-0105	MOTOR 12V (2 Sp)
7	1	24-0171	COIL PROTECTOR
6	1	24-0110	MOTOR BRACKET (6.5")
5	1	24-0141	VENTURI
4	2	24-0133	MOUNTING BRACKET
3	1	24-0161	COVER
2	1	24-0142	COVER
1	1	24-0167	CASING

CHECK BY: DATE: 4/23/96

SYM	DESCRIPTION	DATE	BY

REVISION

THIS PRINT IS PROVIDED ON A RESTRICTED BASIS AND IS NOT TO BE USED IN ANY WAY DETRIMENTAL TO THE INTEREST OF MOBILE CLIMATE CONTROL INC.

IMPERIAL

Mobile Climate Control Inc.
Concord - Ontario - Canada

12-2251 HEATER 12V

SCALE: NTS BY: DP
DATE: MAR 1, 1996
DWG: P3-3329 REV: 0